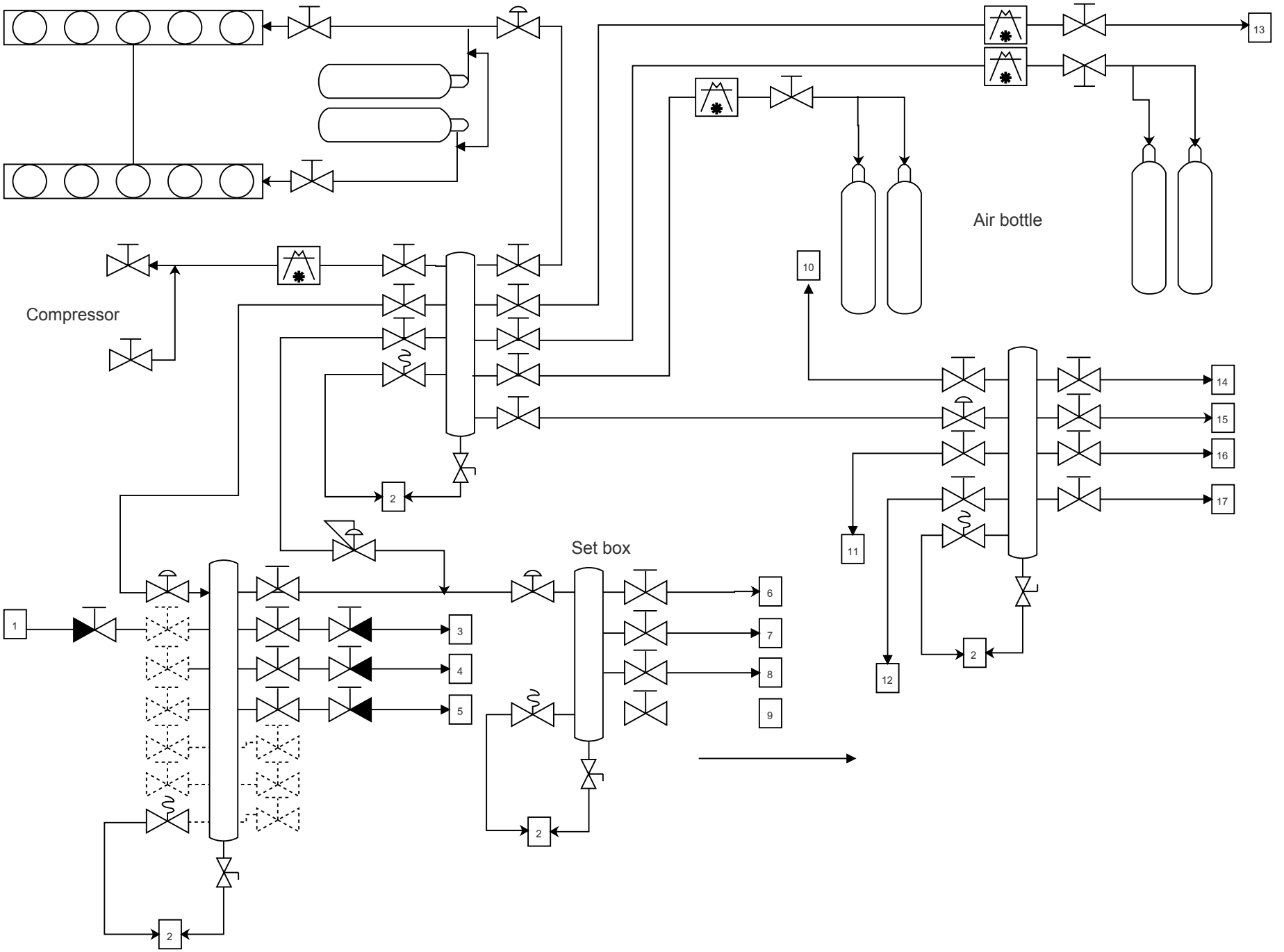
Compressor
Air bottle
Set box
1
2
3
4
5
6
7
8
9
10
11
12
13
14
15
16
17