Reliability Block Diagram
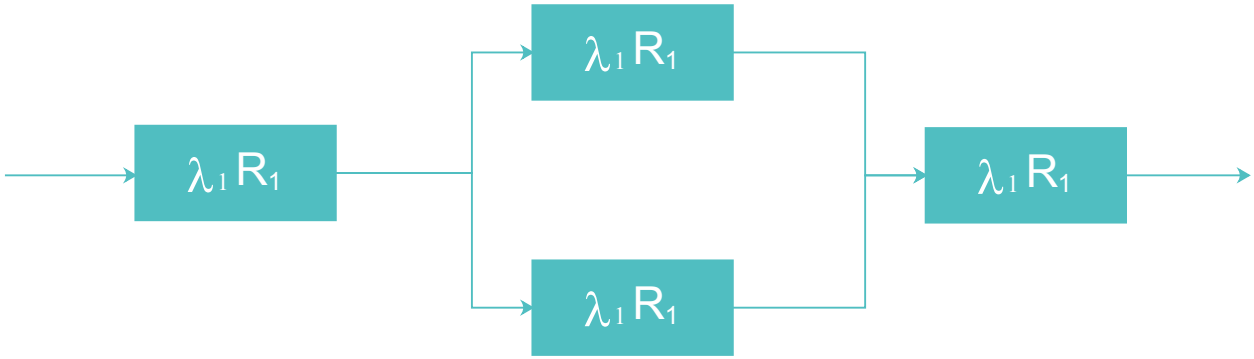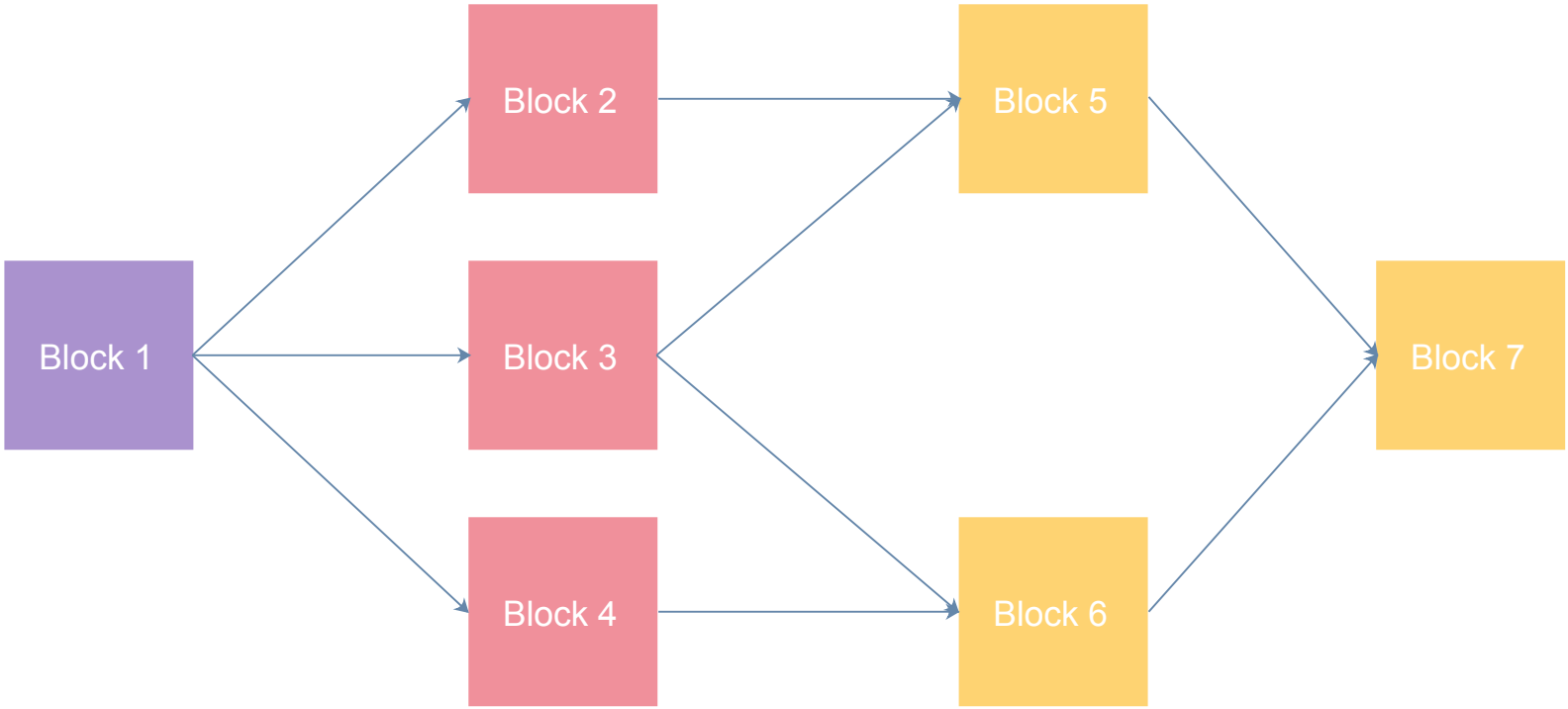
2016-01-31