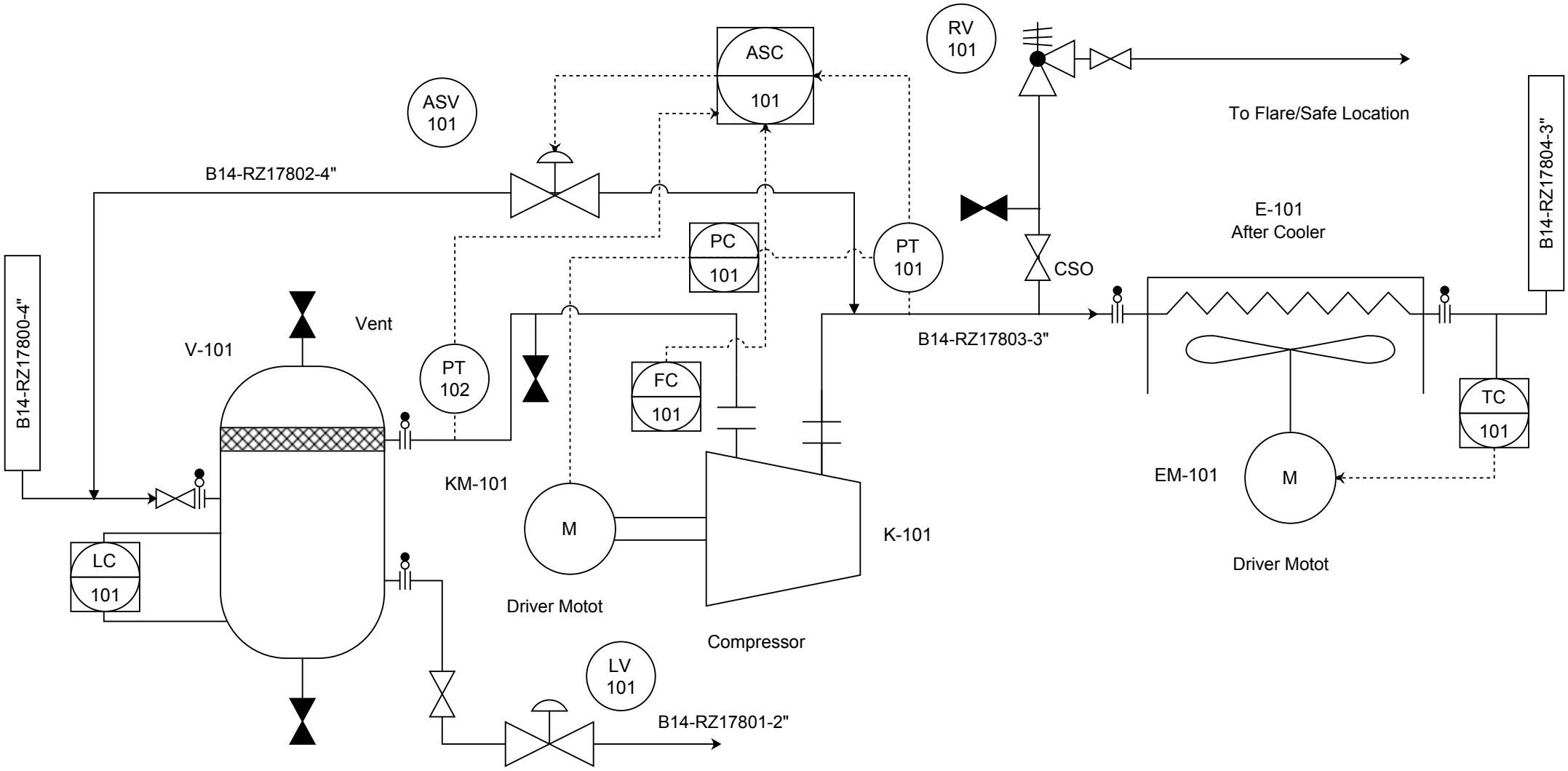
ASC
101
RV
101
ASV
101
To Flare/Safe Location
B14-RZ17802-4"
B14-RZ17804-3"
E-101
After Cooler
PC
101
PT
101
CSO
B14-RZ17800-4"
Vent
V-101
PT
102
FC
101
B14-RZ17803-3"
TC
101
KM-101
EM-101
M
M
K-101
LC
101
Driver Motot
Driver Motot
Compressor
LV
101
B14-RZ17801-2"