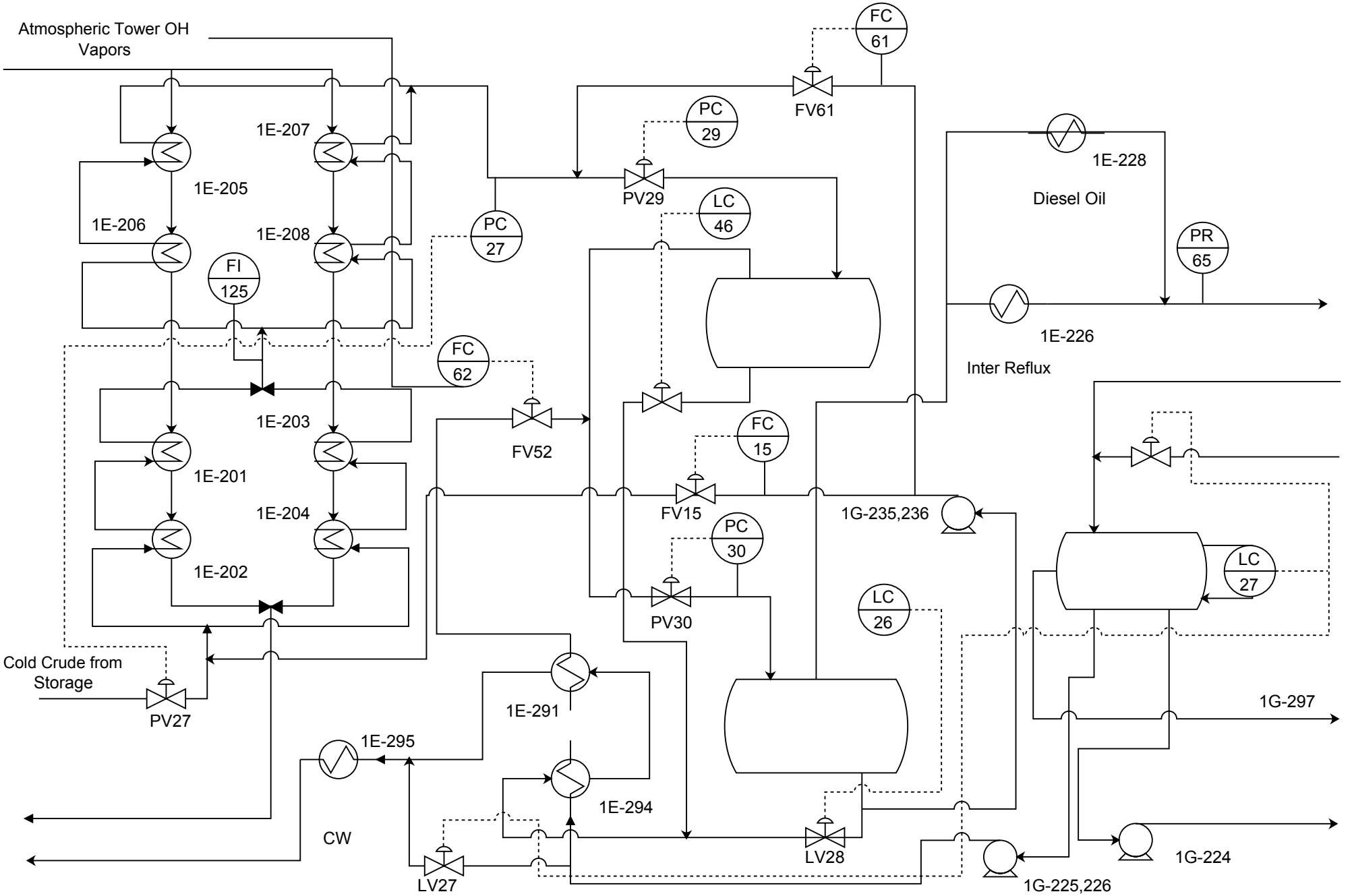
Atmospheric Tower OH Vapors
1E-207
1E-205
1E-206
1E-208
FI 125
PC 27
FC 62
1E-203
1E-201
1E-204
1E-202
FV52
FC 61
FV61
PC 29
PV29
LC 46
FC 15
FV15
PC 30
PV30
LC 26
1E-228
Diesel Oil
PR 65
1E-226
Inter Reflux
1G-235,236
LC 27
1G-297
1G-224
1G-225,226
LV28
LV27
1E-294
1E-291
1E-295
CW
Cold Crude from Storage
PV27