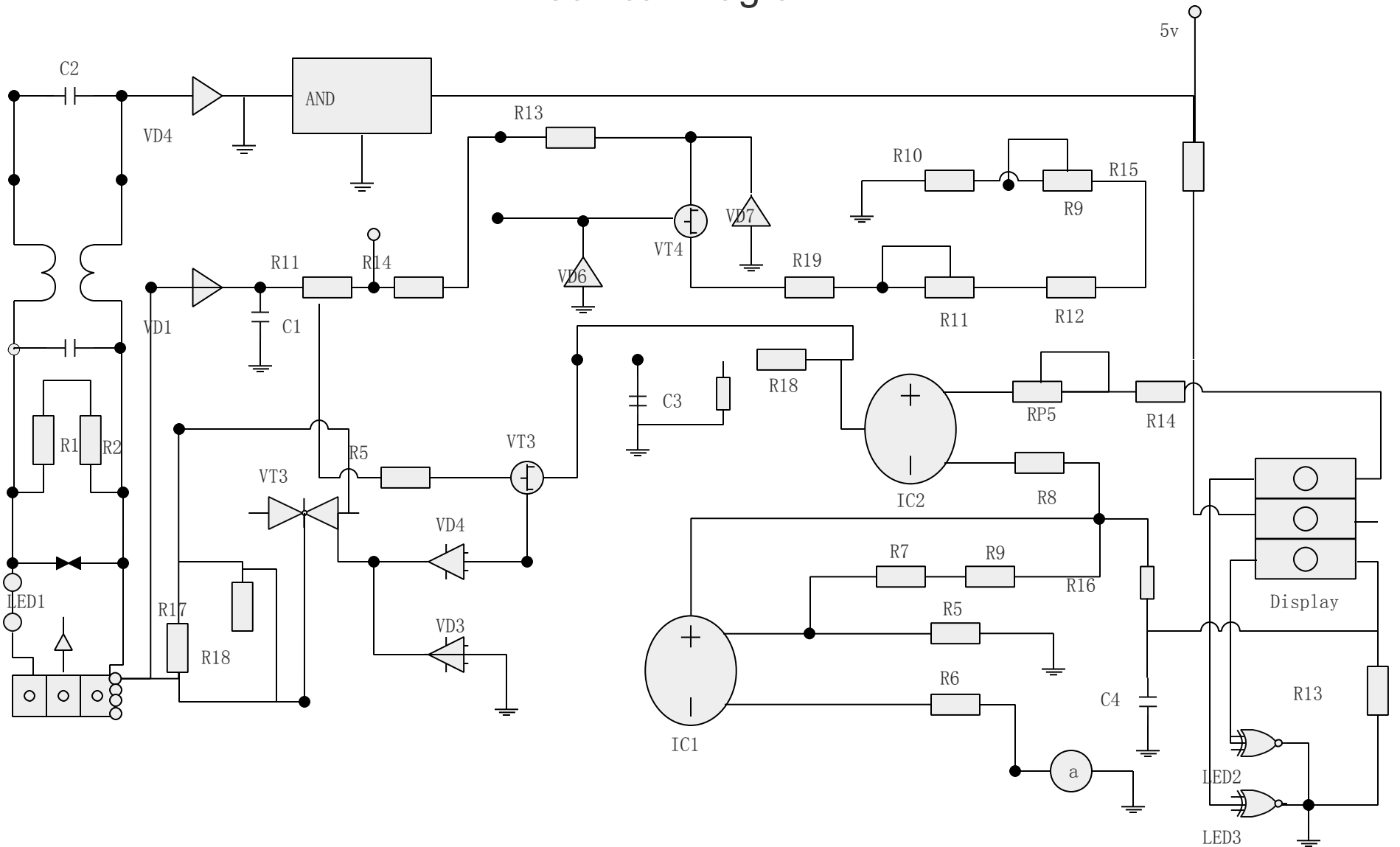Electrical Diagram