Rack Diagram

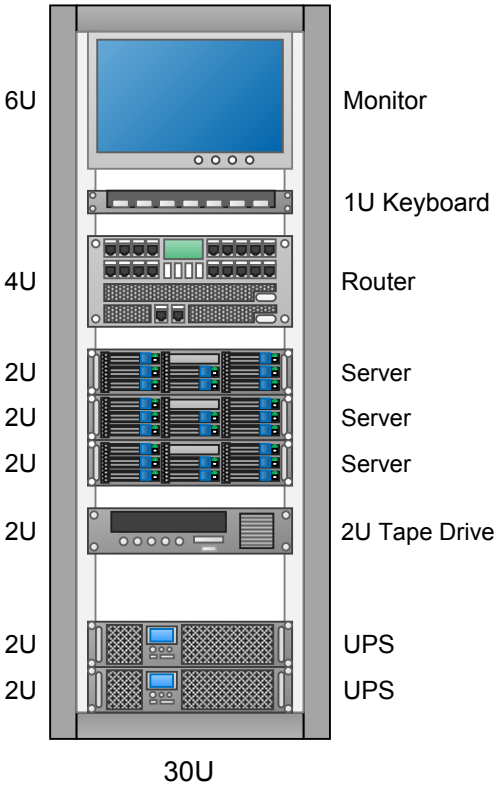

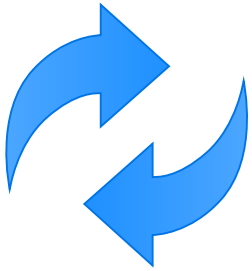

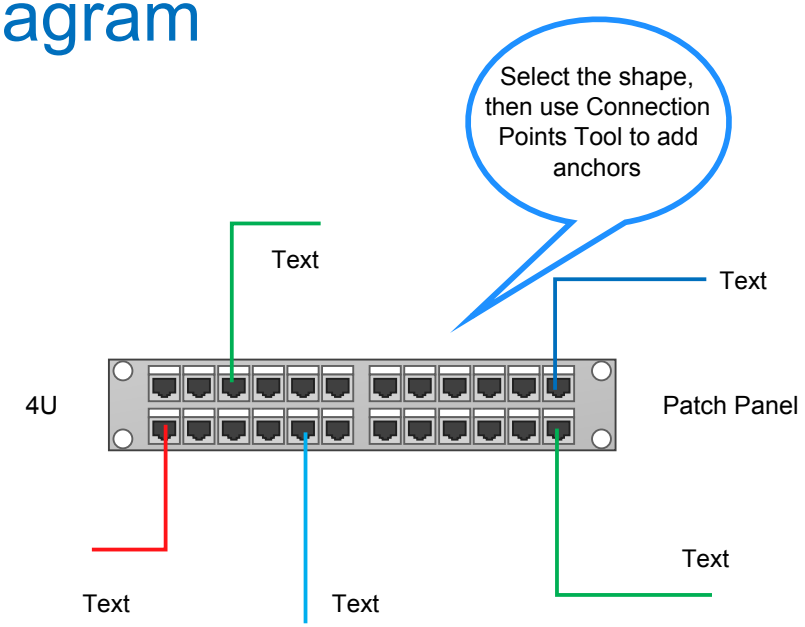

Unit	Device	Role	Description